ST02U

Male and female fork steel connector 180°

Connettore in acciaio forca Maschio e femmina 180°

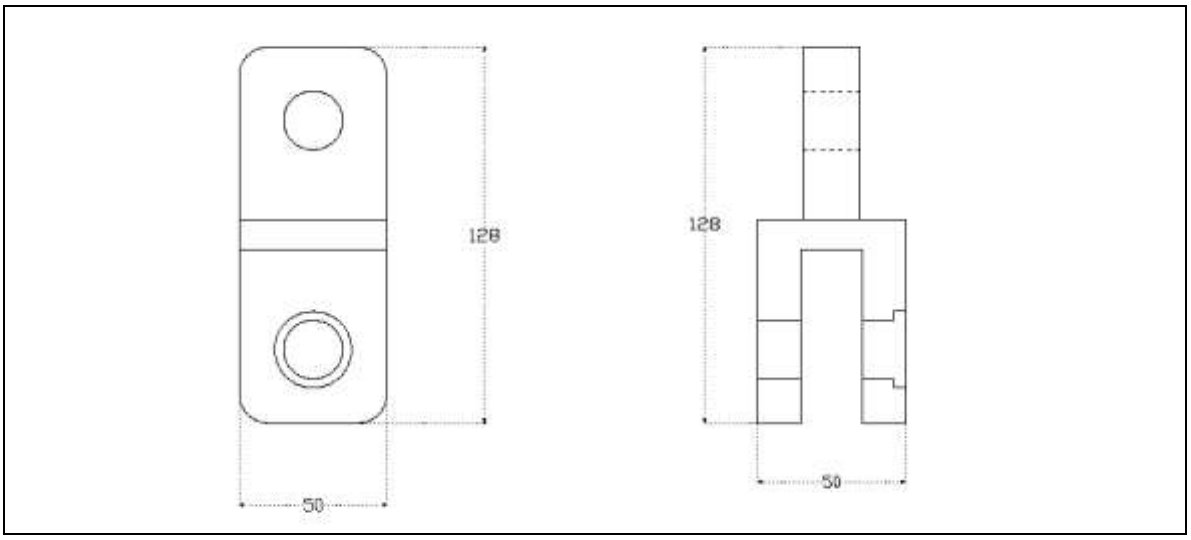

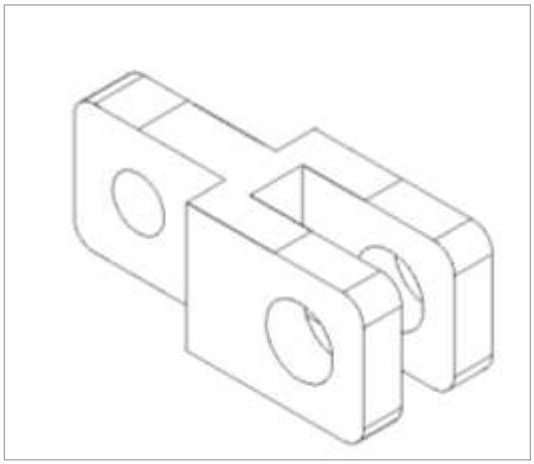

TECHNICAL DATA

149 x 60 x 60 mm

galvanized steel

2.06 kg

0.00032 mc

ACCESSORIES

www.efestoproduction.com - info@efestoproduction.com

Efesto Production Srl Via Orta Loreto loc. Taurana 84012 Angri SA **Italy** **ISO 9001:2008 Certified Company**
Tel. + 39 081 5187923 / + 39 081 5156116 – Fax + 39 081 5165028